Shape & Dimensions

Unit: mm

RVM08VP01 Double Pre-Set

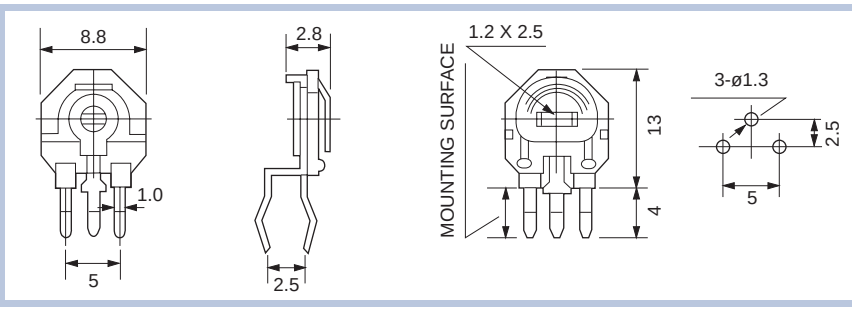

RVM08VP01-1 Dust Proof

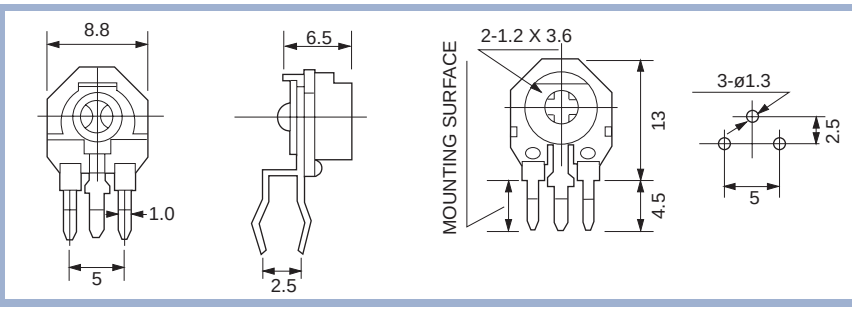

RVM08VP01-2 Double Pre-Set

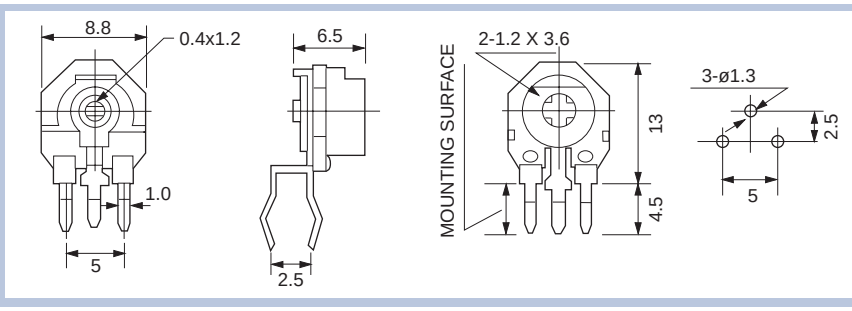

RVM08VP01-3 Dust Proof

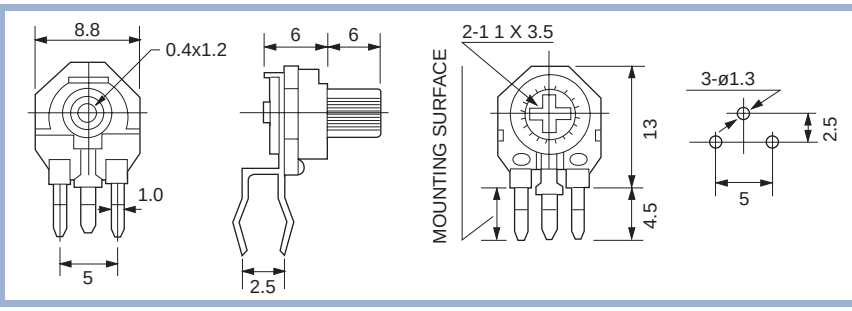
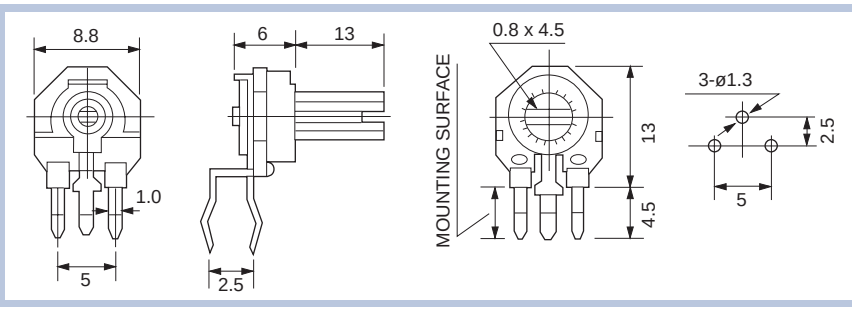
RVM08VP01-4 Dust Proof